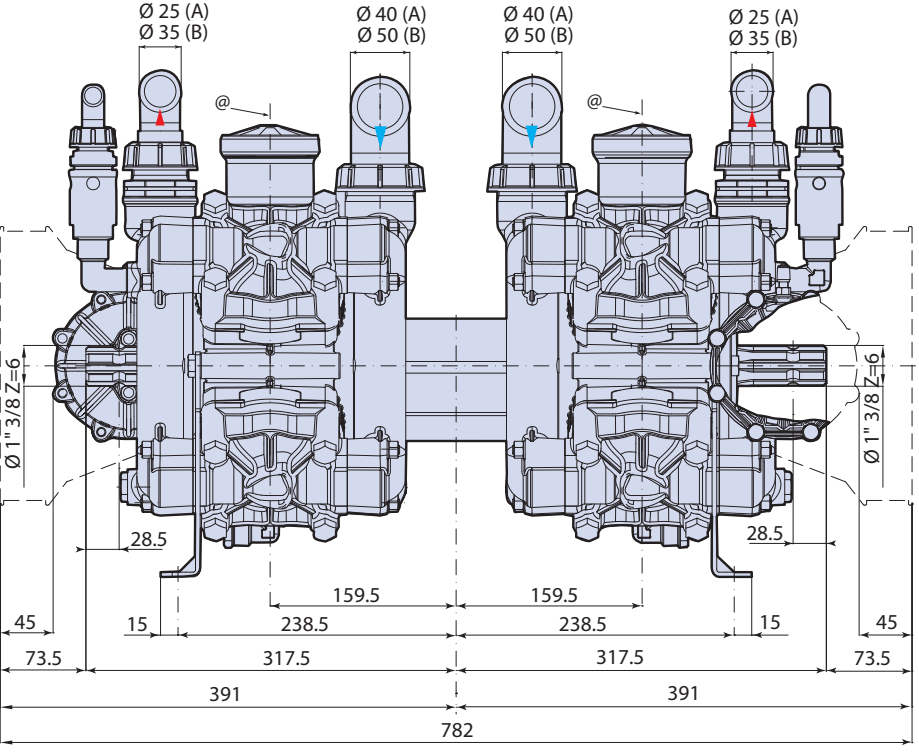

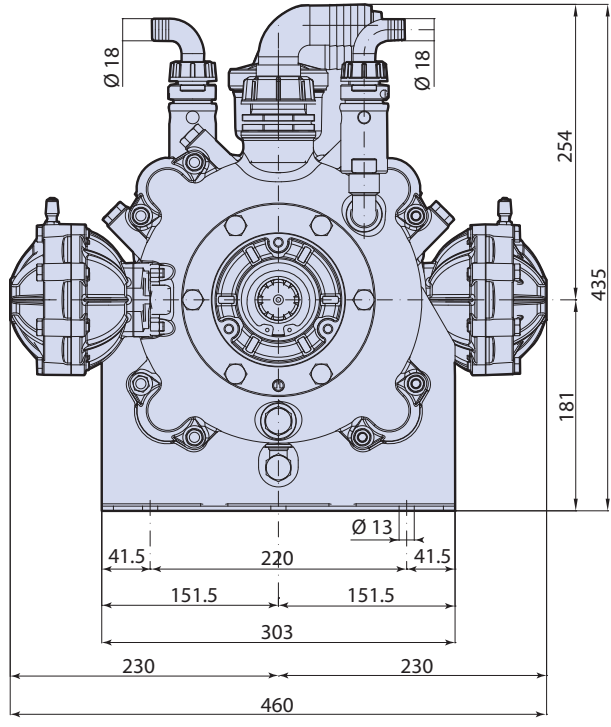

A = AR320 bp Twin Top
B = AR370 bp Twin Top
@ = Pump axis - Asse pompa

AP C/C

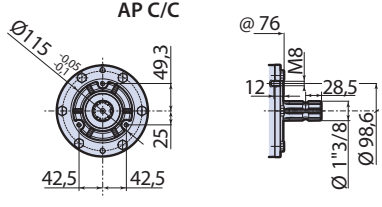
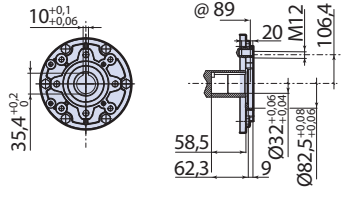
AP C/F Ø32mm